AXIAL TYPE EXPANSION JOINTS

HELS®
HOSE-EXPANSION JOINT-LEVEL CONTROL-STEAM TRAP

AXIAL TYPE - TYPE EXPANSION JOINTS

Axial expansion joints absorb expansion laterally, caused by the thermal difference of the media inside the pipeline.

The pipeline system is divided into several parts and axial expansion joints are installed along the pipeline according to calculations of expansion.
Axial expansion joints are designed to absorb lateral move- ment 30mm and 60mm. Also, it is possible to produce for absorbtion of other movements based on the calculations for different pipelines.

The main part of axial expansion joints is stainless steel corru- gated bellow. For different requirement there are additional parts such as inner sleeve, tie-rods, cover he wall thickness of bellow, number of piles and additional parts of expansion joints are designed according to tempera- ture, pressure and media of pipeline.

Design :
According to ejma standard

Connection:
Floating Flanged, Fixed Flanged, Butt-weld

Working Conditions:
According to DIN 2401

Material:
According to DIN 17440

Bellows:
Stainless Steel

Connection:
Stainless Steel or carbon steel

Nominal Diameter:
DN 25(1") - DN 2600 (104")

Working Pressure:
Standard production ıs based on pn 16, please contact us for hıgh pressure requırements.

Working Temperature:
-80/+427° C (optional; -80/+1100° C)

AXIAL TYPE - TYPE EXPANSION JOINTS

HELS®
HOSE-EXPANSION JOINT-LEVEL CONTROL-STEAM TRAP

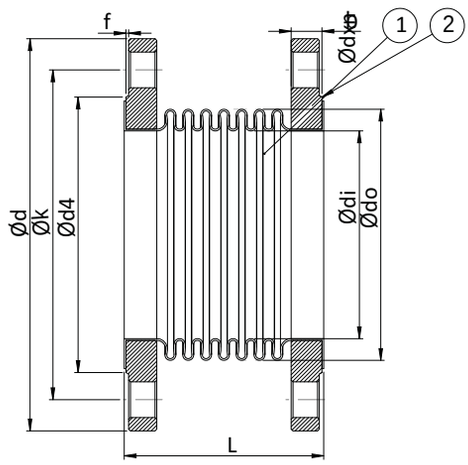

S.NO	PSC	Description	MATERIAL
3	2	FLANGE	St. 37.2
2	2	LAYNER	AISI 304
1	1	Bellow	AISI 304

									HLS-30 MKD	HLS-30 MKD-L	HLS-60 MKD-L
	FLANGE						BELLOW				
Size	Ød	Øk	Ød4	f	b	Ødxn	Ødi	Ødo	L	L	L
DN 25	115	85	68	2	16	Ø 14X4	38	48,2	110	110	
DN 32	140	100	78	2	16	Ø 18X4	42,4	55	115	115	
DN 40	150	110	88	3	16	Ø 18X4	48,3	61	120	120	
DN 50	165	125	102	3	18	Ø 18X4	60,3	76	110	110	
DN 65	185	145	122	3	18	Ø 18X8	76,1	95	110	110	195
DN 80	200	160	138	3	20	Ø 18X8	88,9	111	110	110	190
DN 100	220	180	158	3	20	Ø 18X8	114,3	140	120	120	200
DN 125	250	210	188	3	22	Ø 18X8	139,7	164	130	130	210
DN 150	285	240	212	3	22	Ø 22X8	168,3	200	145	145	245
DN 200	340	295	268	3	24	Ø 22X12	219,1	250	140	140	245
DN 250	405	355	320	3	26	Ø 26X12	273	323	150	150	250
DN 300	460	410	378	4	28	Ø 26X12	323,9	380	160	160	260